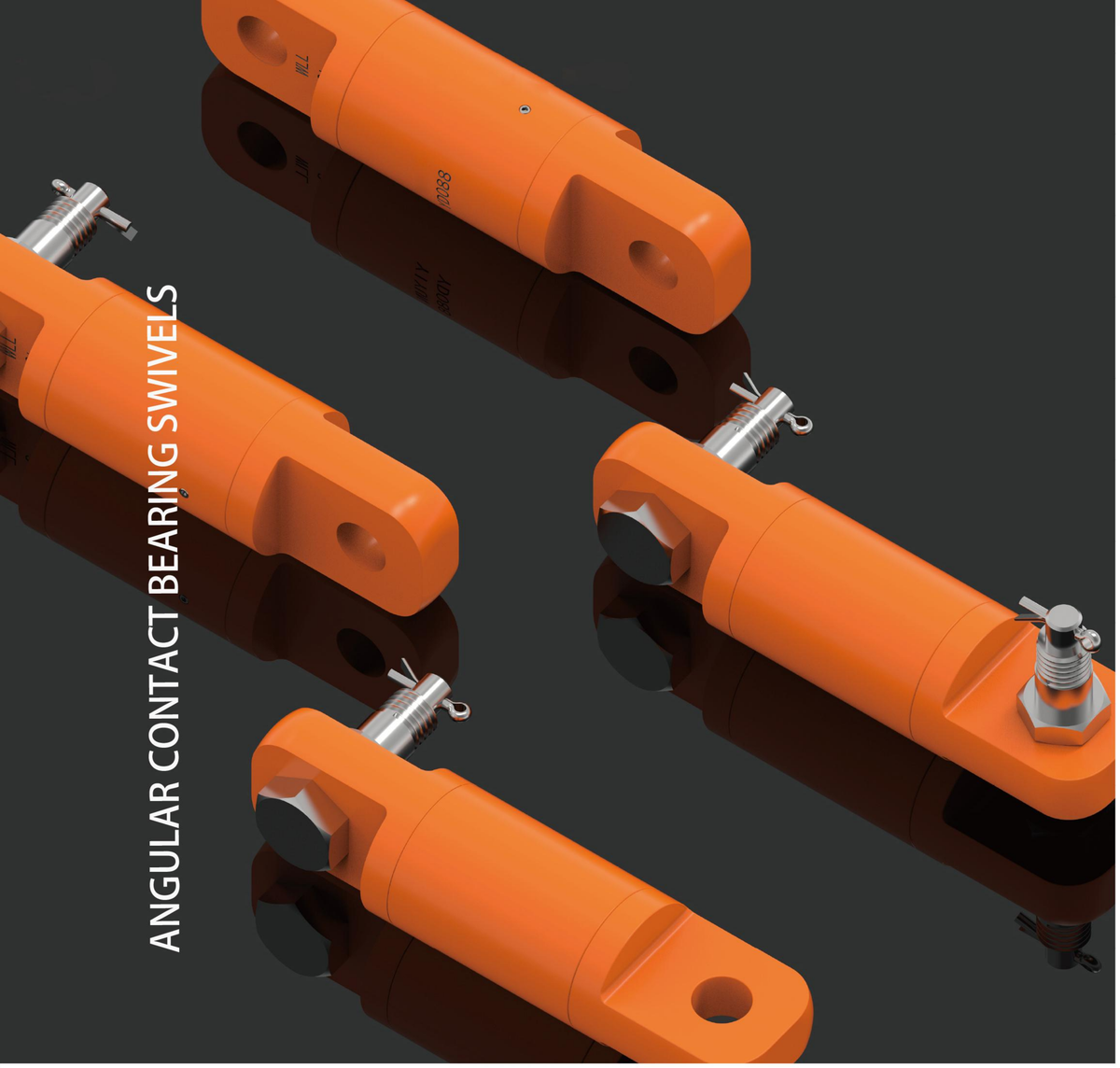

Product Advantage

1. Swivels made of special alloy steel with precision forging, it had high processing performance after special heat treatment process.
2. Built-in grease nozzle for easy maintenance, so that the product has better performance.
3. Working tensile is the same in any direction, safety factor is 4:1
4. The surface is coated with epoxy resin, which prevent surface corrosion effectively.

Angular Contact Bearing Swivels-Bullet Style

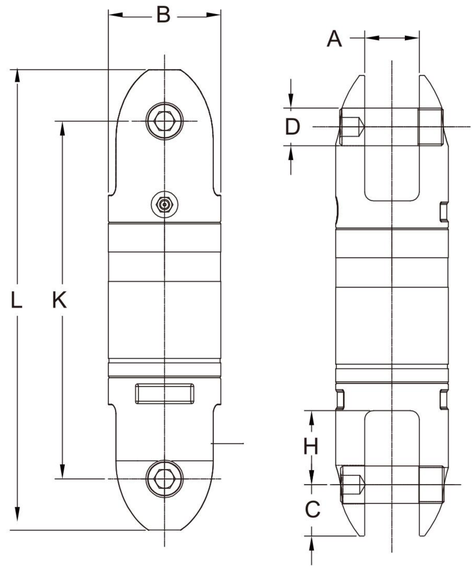

Angular Contat Bearing Swivels-Style

ITEM NO.	SIZE	WLL/T	Dimensions/ mm							Weight Kg
			B	K	L	C	A	D	H	
YD087-007	0.75	0.75	34	102	126	12	15	10	22	0.5
YD087-015	1.5	1.5	40	112	144	16	18	12	26	0.8
YD087-030	3	3	53	158	208	25	23	16	32	2.0
YD087-050	5	5	67	205	267	31	32	22	37	3.9
YD087-085	8.5	8.5	78	250	320	35	37	24	50	6.7
YD087-100	10	10	106	316	408	46	42	38	53	18.6
YD087-150	15	15	119	334	430	48	48	38	56	19.9
YD087-250	25	25	137	403	525	61	62	50	69	36.5
YD087-350	35	35	154	426	548	61	62	50	69	47.6

Angular Contact Bearing Swivels-UU

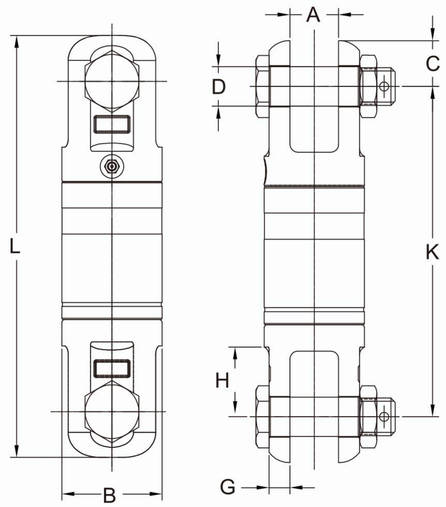

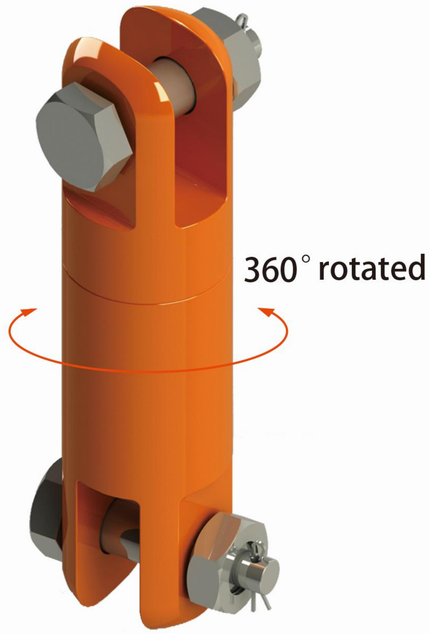

ITEM NO.	SIZE	WLL/T	Dimensions/ mm								Weight
			B	K	L	C	A	D	G	H	Kg
YD086-007	0.75	0.75	34	107	133	13	15	10	6	22	0.5
YD086-015	1.5	1.5	40	119	159	20	18	13	8	26	0.9
YD086-030	3	3	53	160	210	25	23	19	10	32	2.3
YD086-050	5	5	67	203	267	32	32	22	14	37	4.4
YD086-085	8.5	8.5	78	250	326	38	40	30	14	54	7.6
YD086-100	10	10	106	310	410	50	42	38	25	54	19.5
YD086-150	15	15	119	320	440	60	48	38	25	57	21.7
YD086-250	25	25	137	405	535	65	62	50	30	70	39.5
YD086-350	35	35	154	405	535	65	62	50	33	70	46.2
YD086-600	60	60	270	670	890	110	100	80	75	120	352

★ safety factor: 4:1

Angular Contact Bearing Swivels-OU

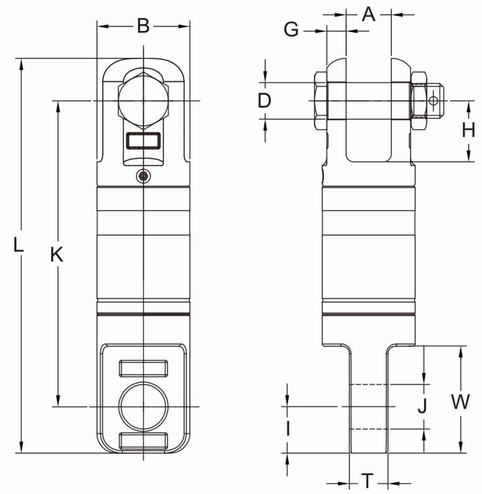

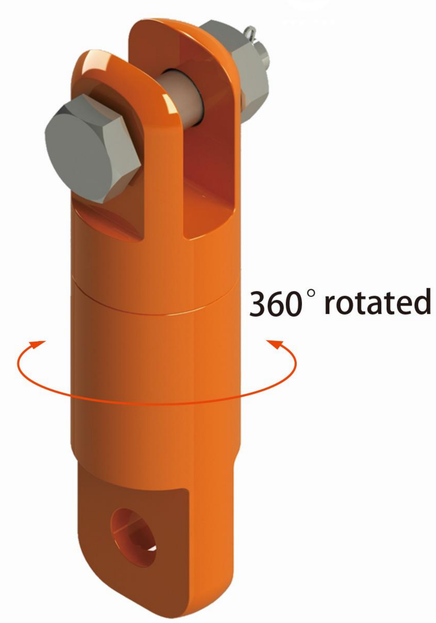

Angular Contat Bearing Swivels-UO

ITEM NO.	SIZE	WLL/T	Dimensions/ mm											Weight
			B	K	L	A	G	D	H	T	J	W	I	Kg
YD089-007	0.75	0.75	34	107	133	15	6	10	22	12	10.5	35	13	0.5
YD089-015	1.5	1.5	40	119	159	18	8	13	26	15	13.5	46	20	0.9
YD089-030	3	3	53	160	210	23	10	19	32	20	20	57	25	2.2
YD089-050	5	5	67	203	267	32	14	22	37	26	33	69	32	4.4
YD089-085	8.5	8.5	78	250	326	40	14	30	54	32	37	92	38	7.4
YD089-100	10	10	106	310	410	42	25	38	54	42	44	104	50	18.0
YD089-150	15	15	119	320	440	48	25	38	57	49	54	117	60	21.2
YD089-250	25	25	137	405	540	62	30	50	70	60	66	140	70	40.0
YD089-350	35	35	154	405	540	62	33	50	70	60	66	140	70	46.7
YD089-600	60	60	270	670	890	100	75	80	120	75	80	230	110	302

★ safety factor: 4:1

Angular Contact Bearing Swivels-OO

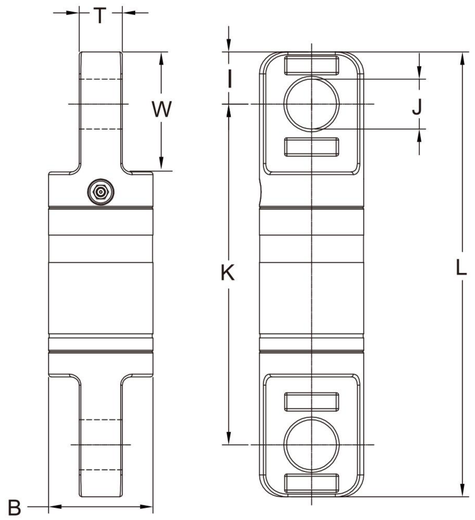

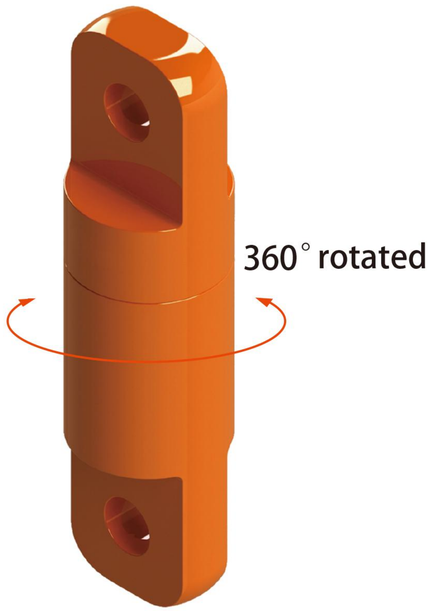

ITEM NO.	SIZE	WLL/T	Dimensions/ mm							Weight Kg
			B	K	L	I	T	J	W	
YD088-007	0.75	0.75	34	107	133	13	12	10.5	35	0.5
YD088-015	1.5	1.5	40	119	159	20	15	13.5	46	0.9
YD088-030	3	3	53	160	210	25	20	20	57	2.1
YD088-050	5	5	67	203	267	32	26	33	69	4.3
YD088-085	8.5	8.5	78	250	326	38	32	37	92	7.3
YD088-100	10	10	106	310	410	50	42	44	104	17.0
YD088-150	15	15	119	320	440	60	49	54	117	21.2
YD088-250	25	25	137	405	545	70	60	66	140	39.0
YD088-350	35	35	154	405	545	70	60	66	140	45.8
YD088-600	60	60	270	670	890	110	75	80	230	253

★ safety factor: 4:1

Concrete Precast Element Lifting

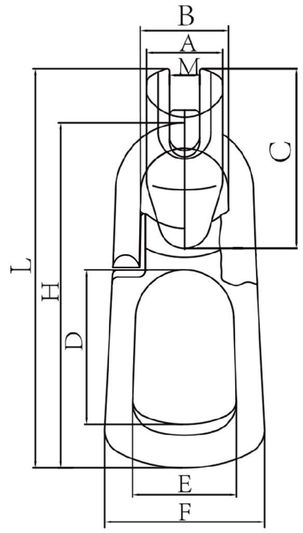

ITEM NO.	WLL/T	Dimensions/ mm									Weight Kg
		A ± 1	B ± 1	C ± 2	D ± 1	E ± 1	F ± 1	H ± 1	M ± 2	L ± 2	
YD095-1-1.3	1.3	33	42	80.4	70.5	45	73	160	11	186	0.89
YD095-1.5-2.5	2.5	41	49	102	85	57	88	188	16	227	1.3
YD095-3-5	5	55	70	133	88	69	110	242	22	282	3.65
YD095-6-10	10	73	92	176	116	83	161	342	30	391	10.01
YD095-12-20	20	110	114.5	224	133.5	107.5	182	437	42	497	20.37
YD095-12-32	32	154	172	307	189	164	272	560	52	661	46.5

★ safety factor: 4:1