P32M Automations-Kraftspanner mit Handhebel

P32M

Manually operated pneumatic power clamps
Double acting / High Torque

Modular design
Compact design
High holding torque
Long life cycle
Low weight (Aluminium body)
Wide range of clamping arm variants
Adjustable opening angle without need for accessory parts 15º.....135º
Mounting areas at front, back and sides
Toggle action machanism
Manual unlocking in case of pressure drop
Inductive sensing module with LED display
Manual use feature
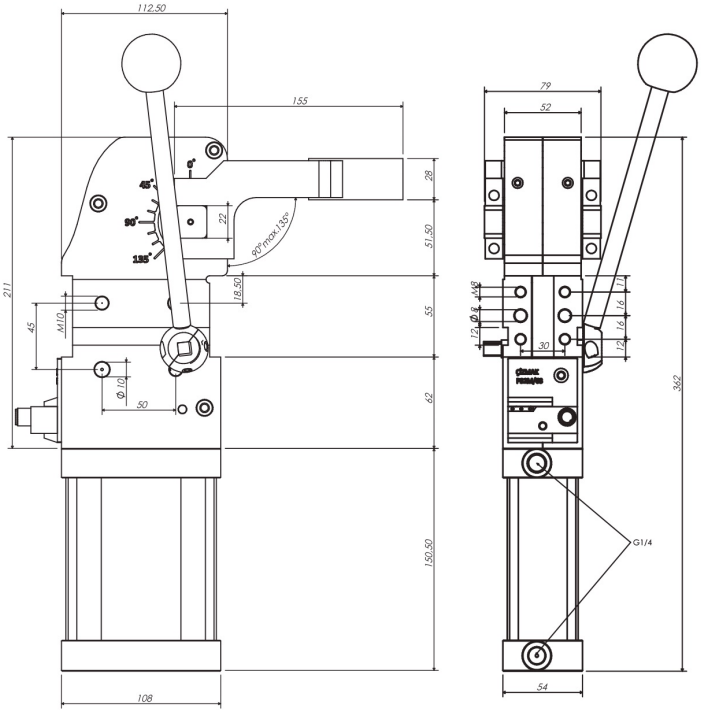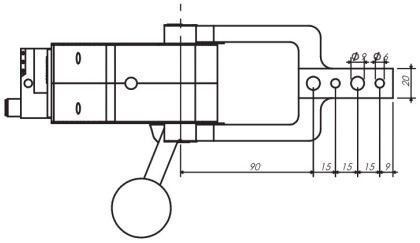
Order No	Clamping Moment (Nm)	Holding Moment (Nm)	g
P32M/63	380	1500	5260